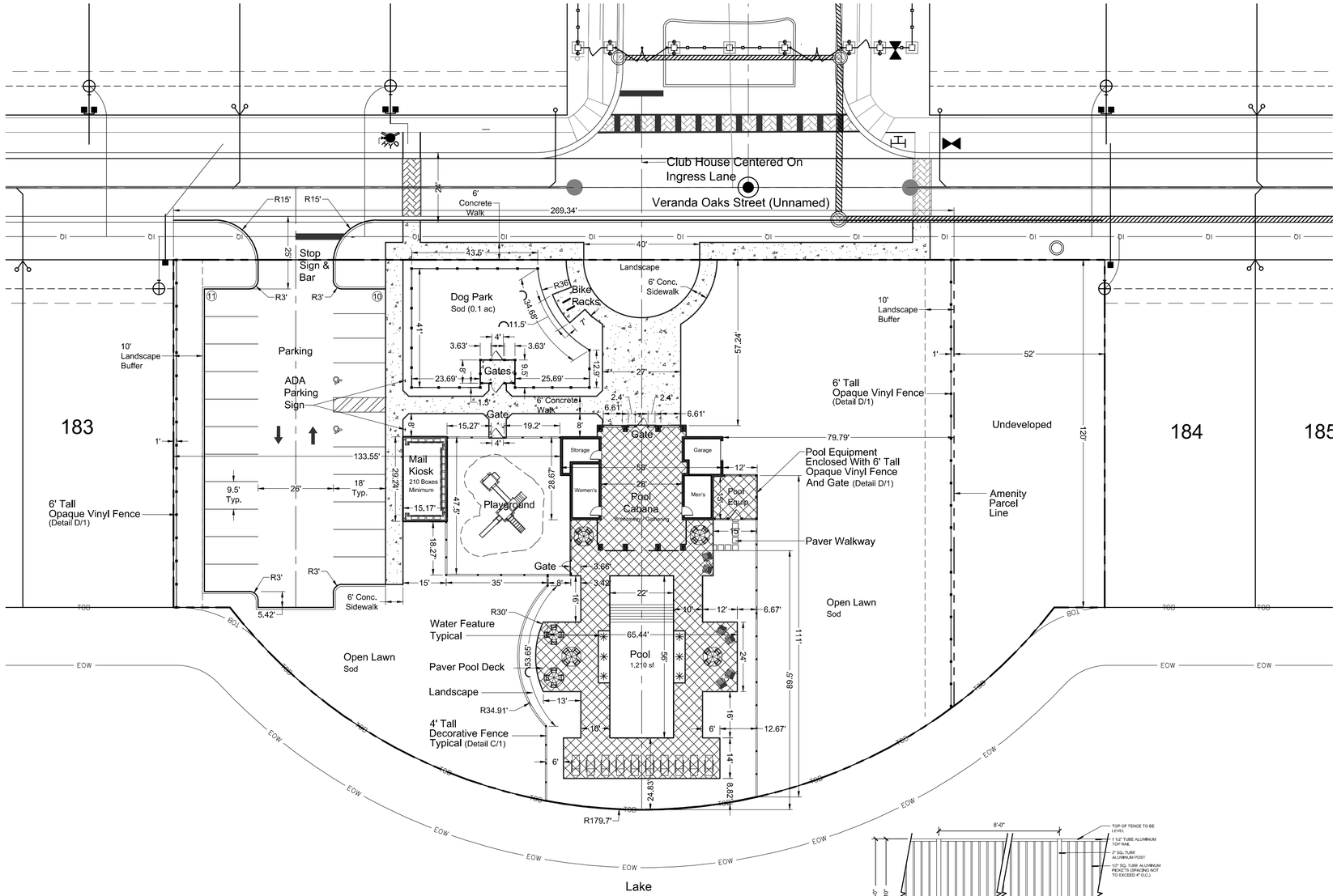

Site Data

Total Site Area:	52,442 sf.	(1.20 ac.)	100%
Future Land Use Designation:	NCD - New Community Development		
Existing Zoning:			PUD
Building Height:			35' max
Total Building SF:	695 / a/c sf		1.3 %

Pervious / Impervious Calculations

Impervious Area:	20,465 sf.	(0.47 ac.)	39%
Total Building Coverage	4,047 sf.	(0.09 ac)	7.7%
Covered Pavilion	3,597 sf.		
Mail Kiosk	450 sf.		
Pool and Deck:	4,367 sf.	(0.10 ac)	8.3%
Vehicular Use Pavement:	10,021 sf.	(0.23 ac)	19.0%
Sidewalks/Pedestrian Areas:	2,030 sf.	(0.05 ac)	4.0%
Pervious Area:	31,977 sf.	(0.73 ac.)	61%
Landscape And Open Space:	31,977 sf.	(0.73 ac)	61%

Parking Requirements

Veranda PUD #8: Section X.e, Parking & Vehicular Storage, Recreation uses

Parking Required: (1 space per 300 sf gross floor building area)	7 Spaces
Parking Provided: (includes 2 ADA space)	21 Spaces

Building Setback Requirements

	Required	Provided
Front:	25'	57.24' +
Side:	10'	133.6' +
Side:	10'	79.8' +
Rear:	25'	89.5' +

General Notes:

- Hazardous waste disposal shall comply with all federal, state and local regulations.
- All landscape areas abutting vehicular use areas shall be curbed or protected by curb stops.
- All building, parking and access areas shall document compliance with the requirements of the American Disabilities Act prior to the issuance of a building permit.
- Soil erosion and sediment control devices shall be in place prior to the comencement of construction activities.
- Landscaping shall be in accordance with the requirements of chapter 153 of the landscape code of the City of Port St. Lucie.
- No landscaping other than grasses shall be located within 10' of a City utility line or appurtenance. All other utilities shall be a minimum of 5' horizontal separation from City utility mains for parallel installations and a minimum 18" below City mains. (All measurements ae take from outside to outside.)
- No landscaping shall be placed in a manner that would create conflicts with the intended operation and maintenance of any existing utility.
- This application is not vested for any municipal fees. All fees are calculated at time of payment. This includes specifically impact fees, upland preserve fees and any administrative review fees for City Departments. No fees are vested based on date of City Council approval.
- Signs are not part of this review and shall be permitted separately from this application. (See Chapter 155 (Sign Code) City of Port St Lucie Land Development Regulations.)

Traffic Statement

The proposed Sales / Amenity Center has been designed to include 21 parking spaces to accommodate more than the maximum number of patrons that have been seen during peak hours at similar sites. The entrance to the parking lot is internal to the site to avoid stacking into public right of way.

Drainage Statement

Amenity:
The stormwater for this project is part of the overall Southern Grove Drainage system permitted under ERP #56-100997-P issued by SFWMD. The proposed impervious area has been accounted for in the overall drainage calculations. The runoff will be collected and discharge into the stormwater ponds through the drainage structures located in the parking lot. The parking lot has been designed to be higher than the 10yr - 24hr storm elevation.

Index of Drawings:

Amenity Site Plan	SP-1
Details & Specifications	SP-2
Site Furnishings	SP-3

lucido & associates
701 SE Ocean Blvd., Stuart, Florida 34994 (772) 220-2100, Fax (772) 223-0220

Key / Location:

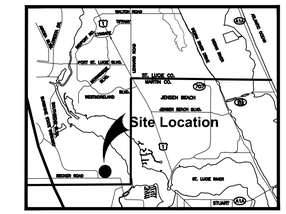

N.T.S.

Project Team:

Owner/Developer:
GreenPointe Developers, LLC
7807 Baymeadows Road East, Suite 205
Jacksonville, FL 32256

Engineer:
Culpepper and Terpening
2980 South 25th Street
Ft. Pierce, FL 34981
772-464-3537

Surveyor:
Culpepper and Terpening
2980 South 25th Street
Ft. Pierce, FL 34981
772-464-3537

Landscape Architect/Land Planner:
Lucido & Associates
701 E Ocean Blvd
Stuart, FL 34904
772-220-2100

GreenPointe Veranda Oaks

Amenity Center Site Plan

City of Port St. Lucie, FL

January 18, 2021
City of Port St. Lucie P#
PSLUD No.

Date	By	Description
07APR22	SJS	Site Plan Submittal

NORTH

SCALE: 1" = 20'

0 10' 20' 40'

REG. # 1018
Thomas P. Lucido

Designer	SJS
Manager	SG
Project Number	21-290
Municipal Number	---
Computer File	21-290 - Amenity Site Concept Plan - K - New Architecture X.dwg

Sheet **SP-1**

© Copyright Lucido & Associates. These documents and their contents are the property of Lucido & Associates. Any reproductions, revisions, modifications or use of these documents without the express written consent of Lucido & Associates is prohibited by law.

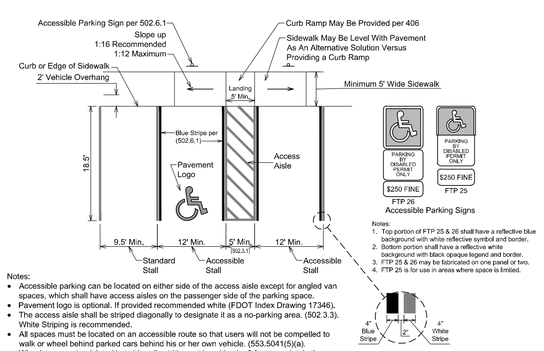

Notes:
- Accessible parking can be located on either side of the access aisle except for angled van spaces, which shall have access aisles on the passenger side of the parking space.
- Pavement logo is optional. If provided recommended white (FDOT Index Drawing 17346).
- The access aisle shall be striped diagonally to designate it as a no-parking area. (502.3.3). White Striping is recommended.
- All spaces must be located on an accessible route so that users will not be compelled to walk or wheel behind parked cars behind his or her own vehicle. (553.5041(5)(a).
- Wheelstop may be deleted but sidewalk width must be widen by 2 feet to maintain the minimum required sidewalk width and allow for the vehicle overhang.

A 1 **Accessible And Standard Parking Space**
Scale: N.T.S.

Notes:
1. Top portion of FTP 25 & 26 shall have a reflective blue background with white reflective symbol and border.
2. Bottom portion shall have a reflective white background with black opaque legend and border.
3. FTP 25 & 26 may be fabricated on one panel or two.
4. FTP 25 is for use in areas where space is limited.

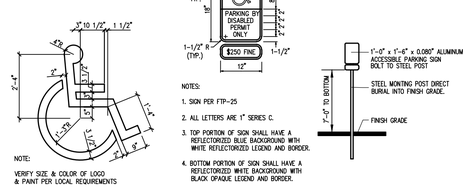

NOTES:
1. SIGN PER FTP-25
2. ALL LETTERS ARE 1" SERIES C.
3. TOP PORTION OF SIGN SHALL HAVE A REFLECTORIZED BLUE BACKGROUND WITH WHITE REFLECTORIZED LEGEND AND BORDER.
4. BOTTOM PORTION OF SIGN SHALL HAVE A REFLECTORIZED WHITE BACKGROUND WITH BLACK OPAQUE LEGEND AND BORDER.

B 2 **Accessible Pavement Marking & Signage**
Scale: N.T.S.

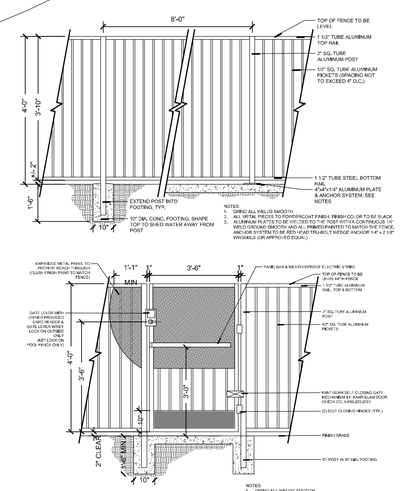
8'-0"
TOP OF FENCE TO BE LEVEL
1 1/2" TUBE ALUMINUM TOP RAIL
2" SQ. TUBE ALUMINUM POST
1/2" SQ. TUBE ALUMINUM PICKETS (SPACING NOT TO EXCEED 4" O.C.)
4'-0"
3'-10"
2'-2"
1'-6"
1 1/2" TUBE STEEL BOTTOM RAIL
4"x4"x1/4" ALUMINUM PLATE & ANCHOR SYSTEM, SEE NOTES
EXTEND POST INTO FOOTING, TYP.
10" DIA. CONC. FOOTING, SHAPE TOP TO SHED WATER AWAY FROM POST
10"
NOTES:
1. GRIND ALL WELDS SMOOTH
2. ALL METAL PIECES TO POWDERCOAT FINISH. FINISH COLOR TO BE BLACK
3. ALUMINUM PLATES TO BE WELDED TO THE POST WITH A CONTINUOUS 1/8" FILLET WELD. PLATES TO BE FABRICATED WITH ANCHOR SYSTEM TO BE ANCHOR SYSTEM TO BE RED-HEAD TRUBOLT WEDGE ANCHOR 1/4" x 2 1/8" WX30WS (OR APPROVED EQUAL)
1'-1"
1"
3'-6"
1"
MIN
PANEL BAR & WEATHERPROOF ELECTRIC STRIKE
TOP OF FENCE TO BE LEVEL WITH FENCE
1 1/2" TUBE ALUMINUM RAIL, TOP & BOTTOM
2" SQ. TUBE ALUMINUM POST
1/2" SQ. TUBE ALUMINUM PICKETS
4'-0"
3'-4"
2'-2"
2" CLEAR
36" MIN.
10"
FINISH GRADE
10"
NOTES:
1. GRIND ALL WELDS SMOOTH
2. ALL METAL PIECES TO POWDERCOAT FINISH. FINISH COLOR TO BE BLACK SEMI-GLOSS PER MATERIAL STANDARDS
3. ALL PANEL BAR PLATES TO BE WELDED TO THE POST WITH A CONTINUOUS 1/8" WELD GROUND SMOOTH AND ALL FINISHED/PAINTED TO MATCH THE FENCE. ANCHOR SYSTEM TO BE RED-HEAD TRUBOLT WEDGE ANCHOR 1/4" x 2 1/8" WX30WS (OR APPROVED EQUAL).
4. PANEL BAR TO BE ELECTRIC STRIKE, 12 VOLT, FAIL SECURE, WITH MAGNETIC POSITION OF TO DETERMINE THE DOOR AS LAID OUT TO THE CLOSED POSITION (8-13 SECONDS).
5. ALL POOL GATES TO HAVE FULL PANEL BAR AND WEATHERPROOF ELECTRIC STRIKE. FENCE FABRICATOR TO PROVIDE SHOP DRAWING FOR INSTALLATION AND GROUNDING.

C 2 **Typical Decorative Fence Detail**
Scale: N.T.S.

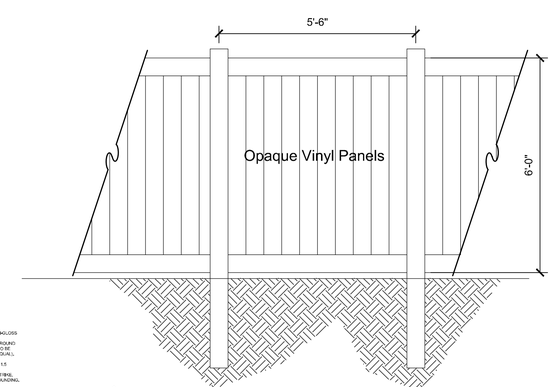

D 2 **Typical 6' Tall Vinyl Fence Detail**
Scale: N.T.S.